GSMH

THE STANDARD STATIONARY SINGLE SEAL SOLUTION FOR CHEMICAL PUMP



TECHNICAL FEATURES

- Stationary Pusher Cartridge Seal.
- The integral structural design of the sealing ring improves stability in high temperature and high pressure conditions.
- The sealing ring drive has a large contact area to prevent damage to the sealing ring caused by equipment startup and shutdown in viscous liquids.
- Higher pressure limit ,Higher temperature limit, maximum temperature resistance of 160 °C, no issues such as ring shedding and end face displacement caused by inlay process.
- Equipped with a large diameter 3/8 "interface for shaft diameters above 35mm to maximize cooling effectiveness.

APPLICABLE CHAMBERS TYPE

- Suitable for Sulzer® APP pump
- Modular cartridge design, provide sealing solutions for general applications
- Impeller spacer ring is provided
- Sizes available: 30, 40, 50, 60, 80, 90

TYPICAL INDUSTRIAL APPLICATIONS

- Chemical and Petrochemical Industry
- Oil, Gas and Energy Sector
- Water Treatment and Environmental Protection Engineering
- Pharmaceutical and Food & Beverage Industries
- Hazardous Chemicals and Specialized Industries
- Marine and Offshore Engineering

PERFORMANCE CAPABILITIES

Shaft diameter	30, 40, 50, 60, 80, 90
Pressure	⩽ 25 bar
Temperature	-20 ° C ~+ 160 °C
Sliding velocity	⩽ 20 m/s

RECOMMENDED PIPING PLANS

Process side	01, 02, 03, 11, 12, 13, 14, 21, 22, 31, 32, 41
Atmospheric side	51, 61, 62, 65A, 65B

PRODUCT STRUCTURE DIAGRAM

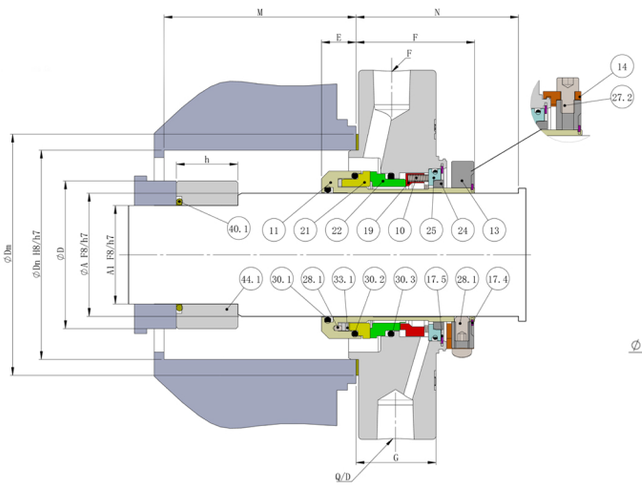

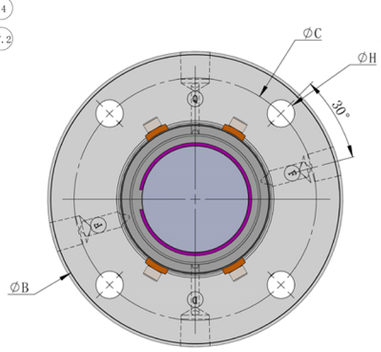

Please refer to the GSMH dimensional sample for detailed dimensional information.

https://www.fbuseals.com/GSMH-Single-Cartridge-Mechanical-Seal-for-Sulzer-APP-Pumps-pd590200748.html

THE COMPARISON CHART OF STANDARD MATERIAL

NO.	Name	Material
11	Sleeve	316SS
21	Rotary Face	SSIC/TC
22	Stationary Face	Carbon/SSIC/TC
12	Gland	316SS
19	Thrust Ring	316SS
25	Spring Plate	316SS
24	Bush Ring	M106K
13	Clamp Ring	316SS
30.1,30.2	O-Ring	EPR/Viton/Aflas/Kalrez

NO.	Name	Material
33.1	Drive Ring	316SS
10	Springs	Hast.C276
30.3	O-Ring	EPR/Viton/Aflas/Kalrez
14,17.5	Circlip	304SS
28.1	Drive Screws	304SS
14	Setting Clips	Cu/Brass
27.2	Clip Screws	304SS
51	Gasket	AF1
44.1	Limit Sleeve	316SS
30.6	O-Ring	PTFE

FBU SEALING TECHNOLOGY（SUZHOU）CO.,LTD

No.183, Yinhe Road, High Tech Industrial Development Zone Changshu Suzhou, Jiangsu, 215533

+86-512-57011188

sale@fbuseals.com

www.fbuseals.com

FBU is certified to API Q1, ISO 9001, ISO 14001